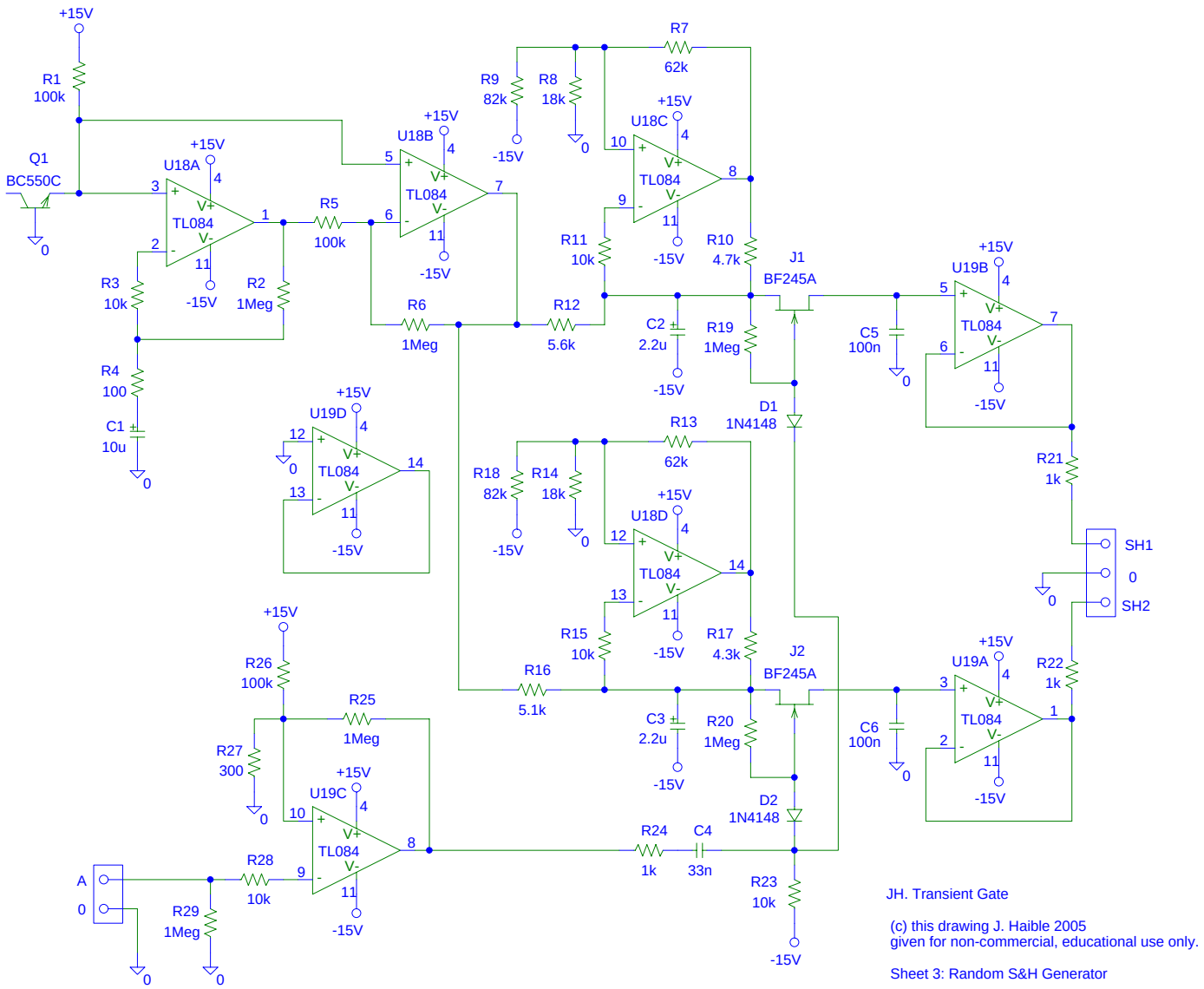

JH. Transient Gate

(c) this drawing J. Haible 2005
given for non-commercial, educational use only.

Sheet 3: Random S&H Generator