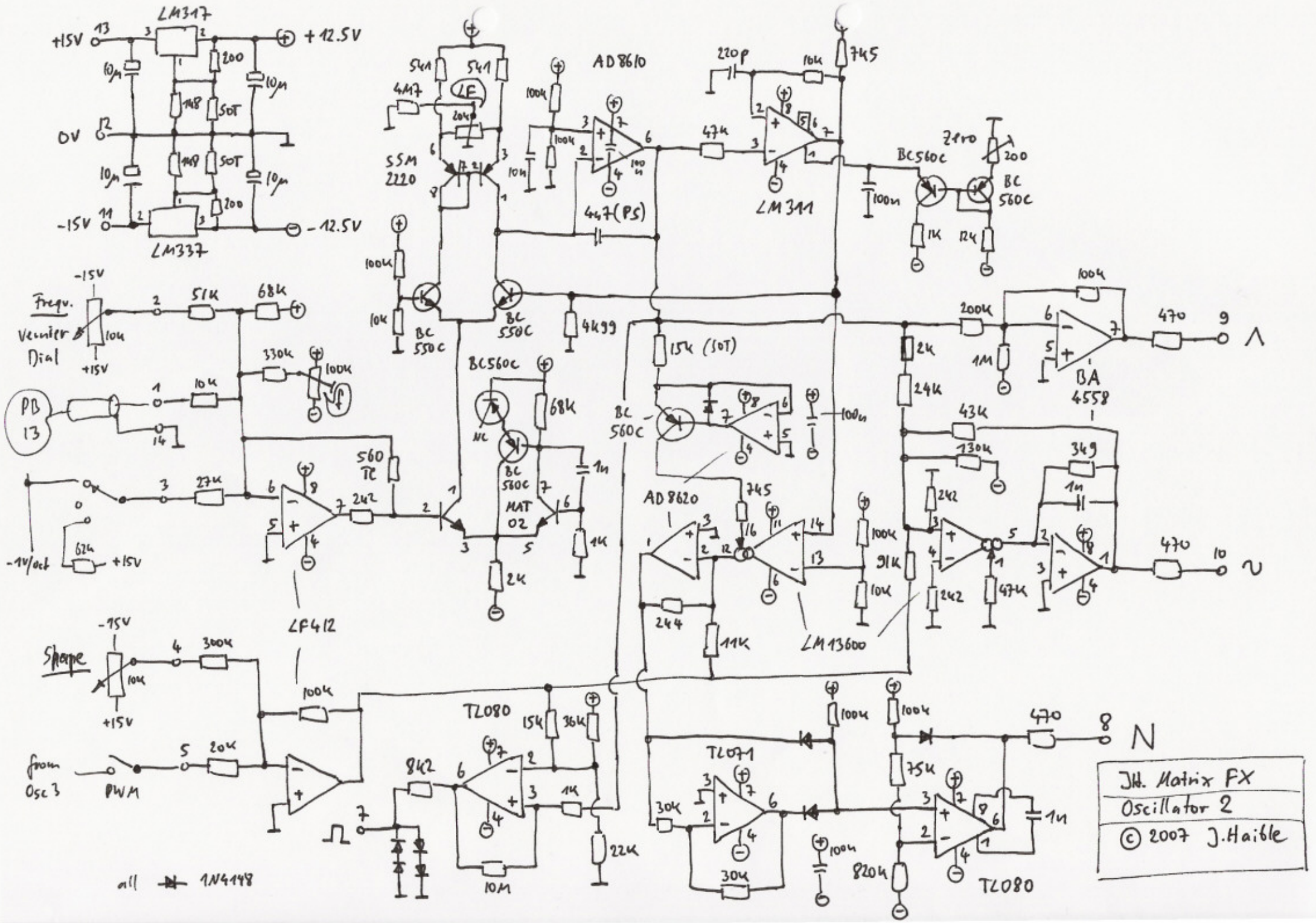
LM317
+15V
+12.5V
0V
-15V
-12.5V
LM337
SSM 2220
AD8610
LM311
BC560C
BC 560C
BC 550C
Frequ.
Vernier Dial
PB 13
-1V/oct
LF412
AD8620
LM13600
BA 4558
MAT 02
Shape
from Osc3
PWM
TL080
TL071
1N4148
JH. Matrix FX
Oscillator 2
© 2007 J.Haible