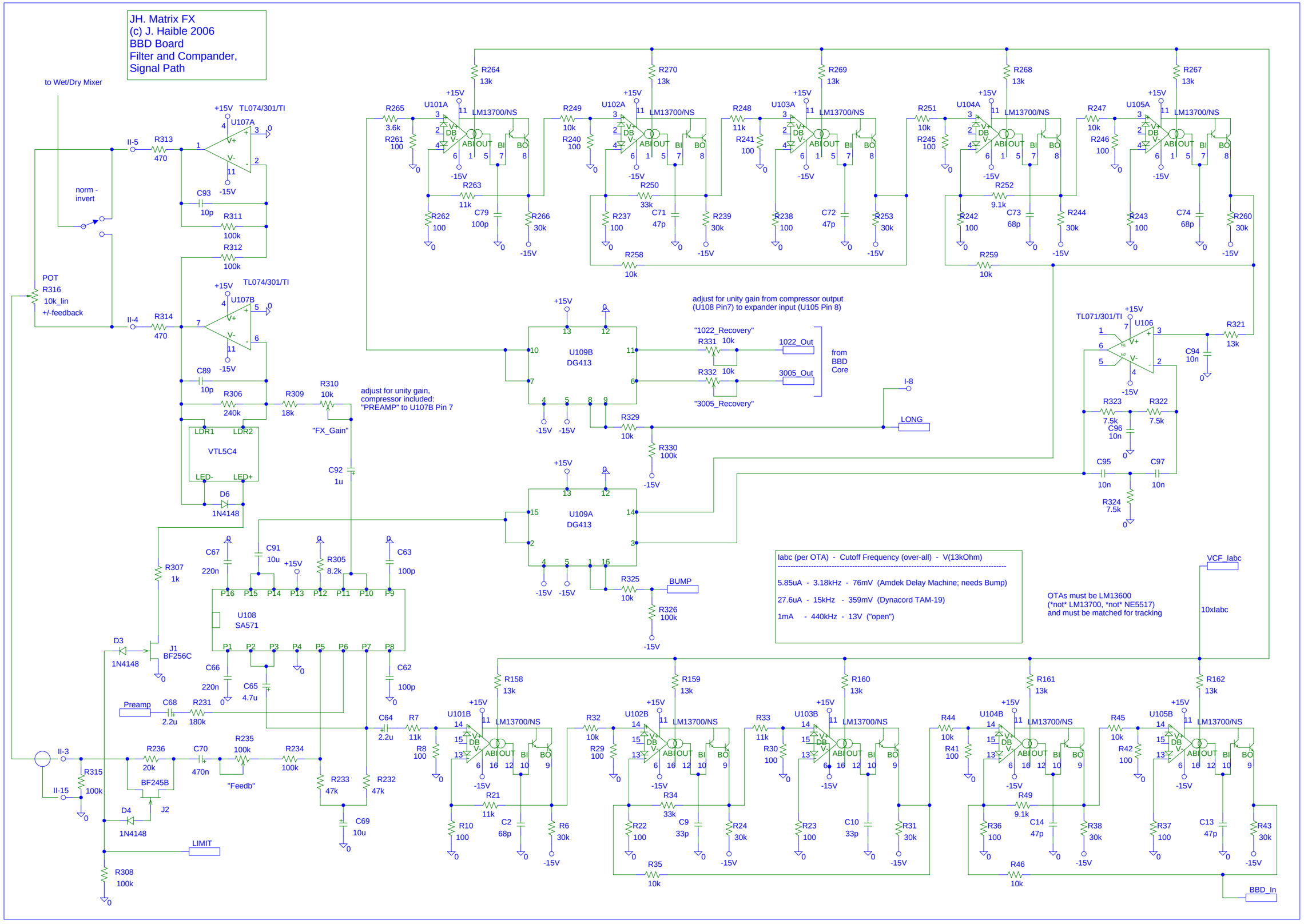
JH. Matrix FX
(c) J. Haible 2006
BBD Board
Filter and Compander,
Signal Path
to Wet/Dry Mixer
norm - invert
POT
R316
10k_lin
+/-feedback
II-5
II-4
II-3
II-15
R313
470
R314
470
U107A
U107B
TL074/301/TI
C93
10p
C89
10p
R311
100k
R312
100k
R306
240k
R309
18k
R310
10k
"FX_Gain"
VTL5C4
LDR1
LDR2
LED-
LED+
D6
1N4148
C92
1u
R307
1k
D3
1N4148
J1
BF256C
U108
SA571
C67
220n
C91
10u
R305
8.2k
C63
100p
C66
220n
C65
4.7u
C62
100p
Preamp
C68
2.2u
R231
180k
R236
20k
C70
470n
R235
100k
"Feedb"
R234
100k
BF245B
J2
D4
1N4148
R315
100k
R233
47k
R232
47k
C69
10u
LIMIT
R308
100k
C64
2.2u
R7
11k
R8
100
U101B
U102B
U103B
U104B
U105B
LM13700/NS
R32
10k
R29
100
R33
11k
R30
100
R44
10k
R41
100
R45
10k
R42
100
R21
11k
R10
100
C2
68p
R6
30k
R34
33k
R22
100
C9
33p
R24
30k
R23
100
C10
33p
R31
30k
R35
10k
R49
9.1k
R36
100
C14
47p
R38
30k
R37
100
C13
47p
R43
30k
R46
10k
BBD_In
R265
3.6k
R261
100
R263
11k
R262
100
C79
100p
R266
30k
R264
13k
U101A
R249
10k
R240
100
R250
33k
R237
100
C71
47p
R239
30k
R258
10k
R270
13k
U102A
R248
11k
R241
100
R238
100
C72
47p
R253
30k
R269
13k
U103A
R251
10k
R245
100
R252
9.1k
R242
100
C73
68p
R244
30k
R259
10k
R268
13k
U104A
R247
10k
R246
100
R243
100
C74
68p
R260
30k
R267
13k
U105A
+15V
-15V
U109B
DG413
U109A
DG413
adjust for unity gain, compressor included: "PREAMP" to U107B Pin 7
adjust for unity gain from compressor output (U108 Pin7) to expander input (U105 Pin 8)
"1022_Recovery"
R331 10k
1022_Out
R332 10k
3005_Out
"3005_Recovery"
from BBD Core
I-8
LONG
R329
10k
R330
100k
R325
10k
BUMP
R326
100k
TL071/301/TI
U106
R321
13k
C94
10n
R323
7.5k
R322
7.5k
C96
10n
C95
10n
C97
10n
R324
7.5k
VCF_Iabc
10xIabc
Iabc (per OTA) - Cutoff Frequency (over-all) - V(13kOhm)
5.85uA - 3.18kHz - 76mV (Amdek Delay Machine; needs Bump)
27.6uA - 15kHz - 359mV (Dynacord TAM-19)
1mA - 440kHz - 13V ("open")
OTAs must be LM13600
(*not* LM13700, *not* NE5517)
and must be matched for tracking
R158
13k
R159
13k
R160
13k
R161
13k
R162
13k