JH. Matrix FX

© 2006 J. Haille
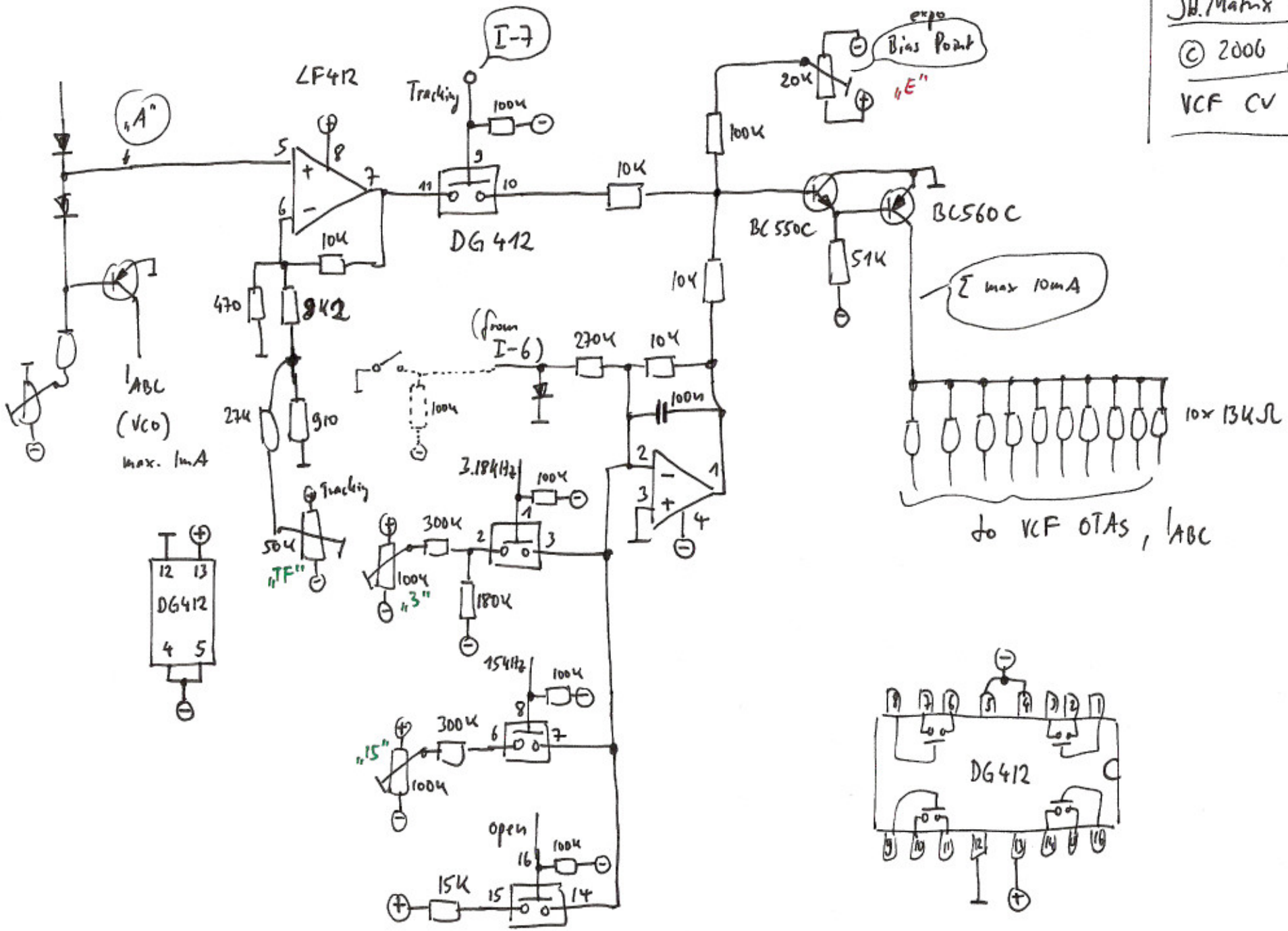
VCF CV