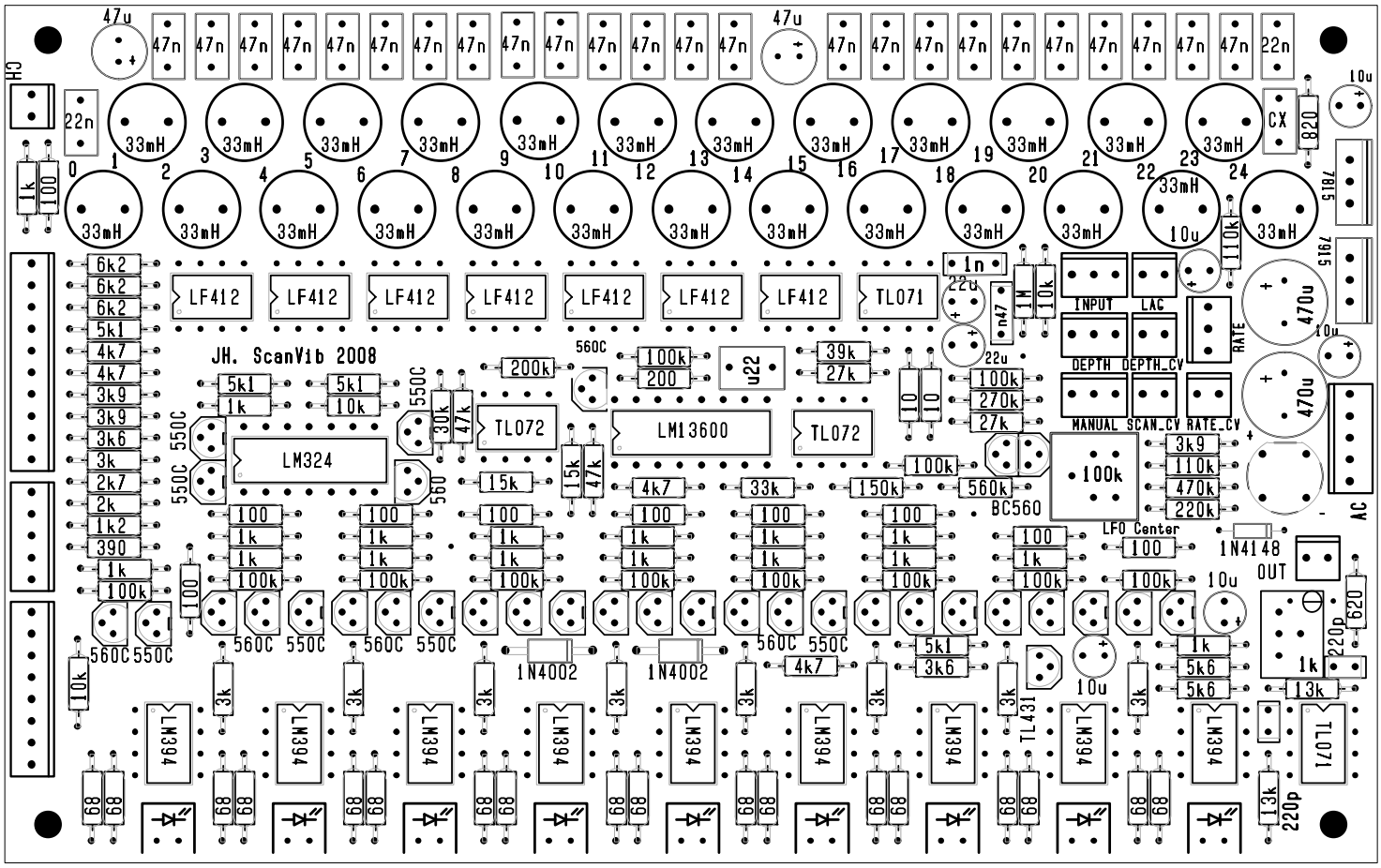
JH. ScanVib 2008
LF412
TL071
LM324
LM13600
TL072
u22
LM394
TL431
1N4002
1N4148
BC560
550C
560C
INPUT
LAC
RATE
DEPTH
DEPTH_CV
MANUAL
SCAN_CV
RATE_CV
LFO Center
OUT
AC
CH
CX
7815
7915
33mH
47n
47u
10u
22u
470u
100k
220p
620
820
13k